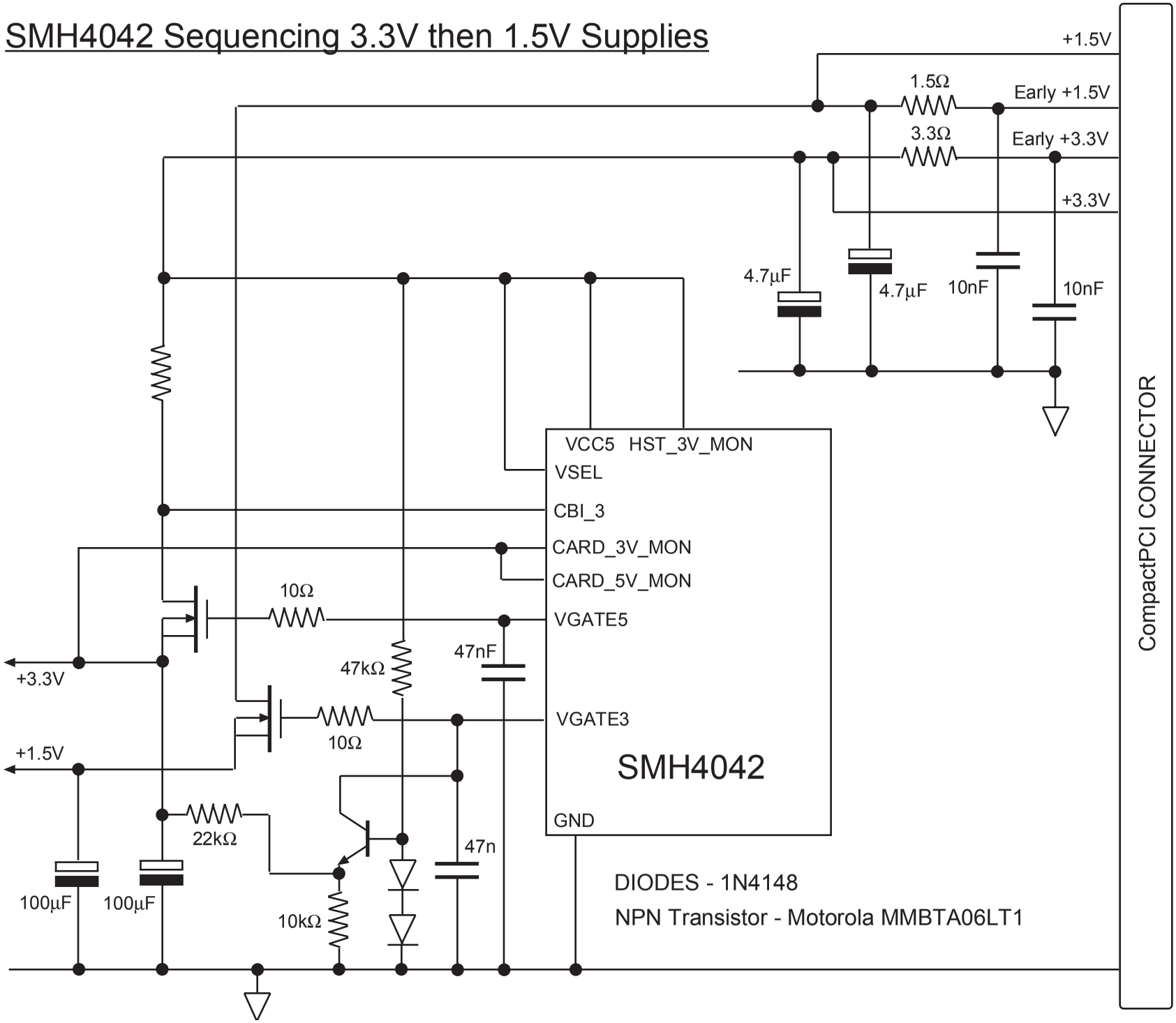SMH4042 Sequencing 3.3V then 1.5V Supplies