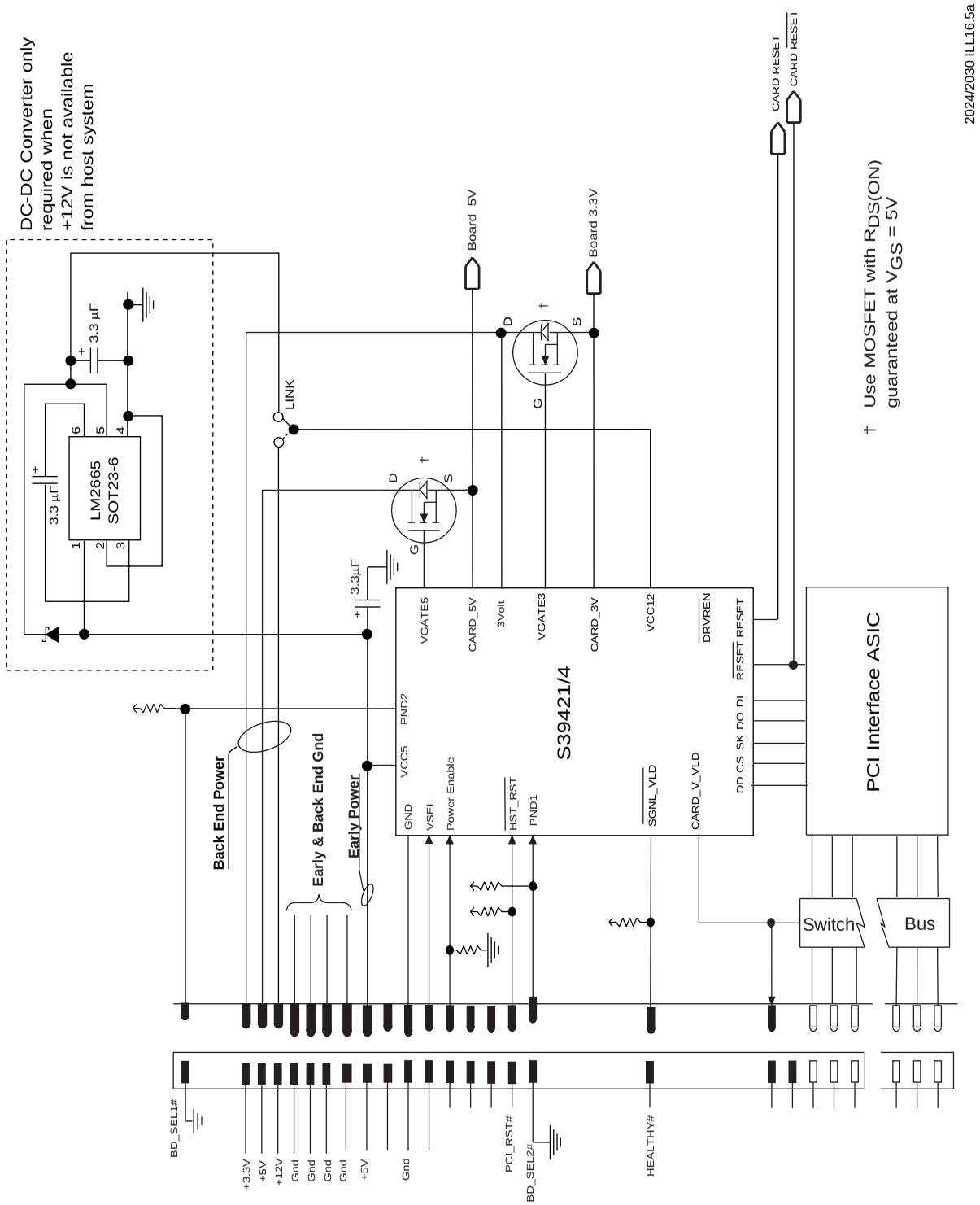

TYPICAL PCI INTERFACE SCHEMATIC WITH ON CARD DC-DC CONVERTER